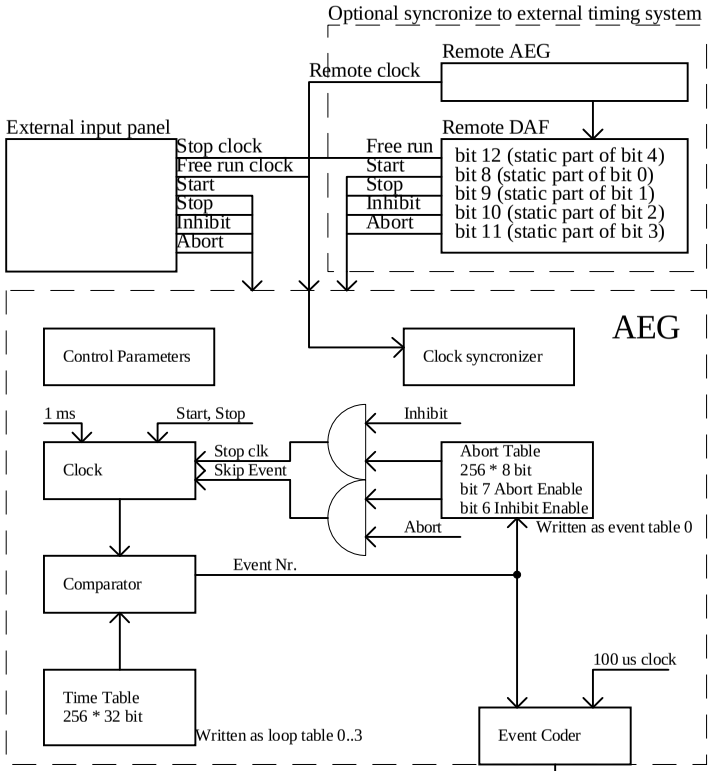

The DAF command parameter is normally merged into the control parameter of the power supply controlled by the DAF. In order to control both without colliding bit settings, the DAF is controlled by the 8 uppermost bit of the parameter. Likewise the status of the DAF is merged with the status of the power supply, leaving only a single bit (bit 15) for the DAF status.

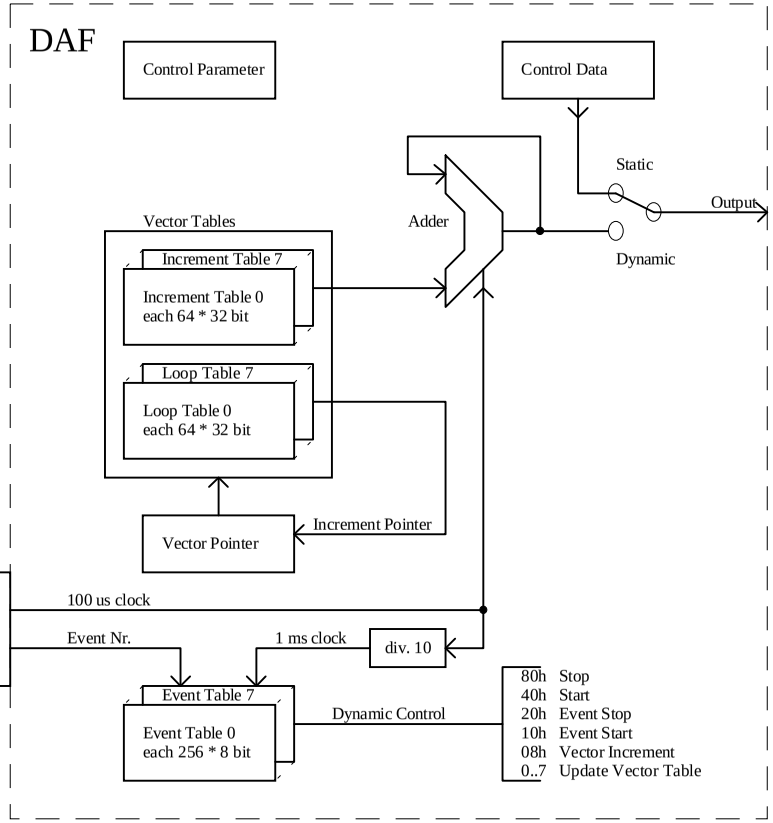

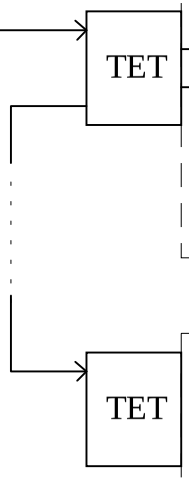

DAF

Control of the AEG requires 2 consecutive parameters with the following layout:

Parameter 1 control:	Parameter 1 status:
Command bit	Status bit
0 - Start AEG sequence	AEG start
1 - Stop AEG sequence	AEG stop
2 - Inhibit (pause)	Inhibit
3 - Abort	Abort
4 - Enable Recycle timer	Recycle timer enabled
5..6 - unused	
7	AEG running
8 - Enable remote DAF Start input	remote DAF Start input
9 - Enable remote DAF Stop input	remote DAF Stop input
10 - Enable remote DAF Inhibit input	remote DAF Inhibit input
11 - Enable remote DAF Abort input	remote DAF Abort input
12 - Enable external Start input	external Start input
13 - Enable external Stop input	external Stop input
14 - Enable external Inhibit input	external Inhibit input
15 - Enable external Abort input	external Abort input
Command data	Status data
Recycle time in 20 ms units for recycle timer	TET output value

Parameter 2 control:
AEG 50 Hz control:
Enable 50 Hz syncronize for 1 marked bit in positions corresponding to parameter 1.

Parameter 2 status:
Time lsw
Parameter 2 status-data:
Time msw

Layout of DAF command:
bit 15,14 =
00 - static mode
01 - dynamic mode - direct write during Event-STOP
10 - dynamic mode - no direct write
11 - same as previous (mode = 10)
bit 11..13 =
reserved for vector table number
bit 8..10 =
event table number

Layout of DAF status:
bit 15 =
0 - DAF ok
1 - G64 unable to control DAF

If further DAF status information is required, you have to spend 2 additional consecutive parameters.
Layout of extended DAF status:
Parameter 1 status:
bit 15 =
normal DAF bit 15 status
bit 14 =
0 - static mode
1 - dynamic mode
bit 13 =
control bit 14, reserved
bit 12 =
0 - Stop
1 - Run (= Ramping)
bit 11 =
Event stop
bit 7..10 =
unused
bit 4..6 =
Event table number
bit 0..2 =
Vector table number

Parameter 1 status-data:
bit 8..15 =
Event number (= TET value)
bit 6..7 =
2 lsb of vector table number
= bit 0..1 of par. 1 status
bit 0..5 =
vector number.

Parameter 2 status
unused.

Parameter 2 status-data:
DAF output Value

Title	DAF / AEG Blockdiagram		
Size A4	Number Dia578a.sch		Revision
Date:	8-Apr-1998	Sheet of	1/1
File:	D:\USER\SCH\PER\DIA578A.SCH	Drawn By:	PC